Mark 6:
A Next-Generation VLBI Data System

Alan Whitney & David Lapsley
MIT Haystack Observatory

29 August 2011
EVN TOG meeting
Arecibo Observatory

Mark 6 project

- Goal is to develop a 16 Gbps COTS VLBI data system based on COTS-hardware, Linux OS, open-source software
- Began as proposed joint development between Haystack Observatory and small NH company (XCube); now is joint development effort between:
  - Haystack Observatory – all software and software support; hardware specification
  - NASA/GSFC High-Performance Computing Center – consultation on high-performance hardware
  - Conduant Corp – Mark 6 chassis and disk module; sales and support
- Target date for general availability – Early 2012

Mark 6 Characteristics

- 1 to 4 10GigE data interfaces; data from each data interface retains separate identity
- Up to 16Gbps sustained recording rate (to 32 disks); ~32Gbps burst mode capture (not yet fully tested)
- Supports commodity SATA disks (but disks must be qualified)
- eSATA cable connections from controller to disk module(s) [four disks per cable]; insensitive to cable order
- Records to standard Linux files
- Manages slow/failed disks to sustain target data rates
- Can use Mark 5 SATA modules updated with new module backplane and front panel
- Playback as standard Linux files
- Good fit to two current VLBI programs:
  - VLBI2010 – currently planning 16Gbps/stn, possibly expanding to 32Gbps/stn
  - mm-VLBI – currently planning 16Gbps/stn, expanding to 64Gbps/stn over next few years

Mark 6 Project Status

- Mark 6 hardware and software specifications have been written and are being implemented
- Sustained 16Gbps from four 10GigE interfaces to disk has been demonstrated, but not yet optimized
- Some planned features:
  - Resilient file system
  - Dynamically gather individual disk-performance statistics
  - Allow disk modules (or sets of disk modules) to be queued for automatic switchover from one to another during recording
  - Full playback support
  - Mark 6 will utilize same system chassis as Mark 5
- Design is in progress at Conduant for:
  - New module backplane for existing Mark 5 SATA disk module with:
    - Front-panel e-SATA connector
    - New power-connector on rear panel
  - New chassis backplane with power-sequencing for disk modules

Plans

- Complete Mark 6 VSI-S implementation
- Full support for e-VLBI
- Integrate Mark 6 with NASA Field System
- Integrate Mark 6 with DiFX correlator
- First 16Gbps VLBI experiment with Mark 6 planned for fall 2011 with VLBI2010 system at Westford and GGAO antennas
- Expected Mark 6 availability to VLBI community ~early 2012

A Mark 6 memo series is available at
www.haystack.edu

Mark 6 Physical System for 16Gbps

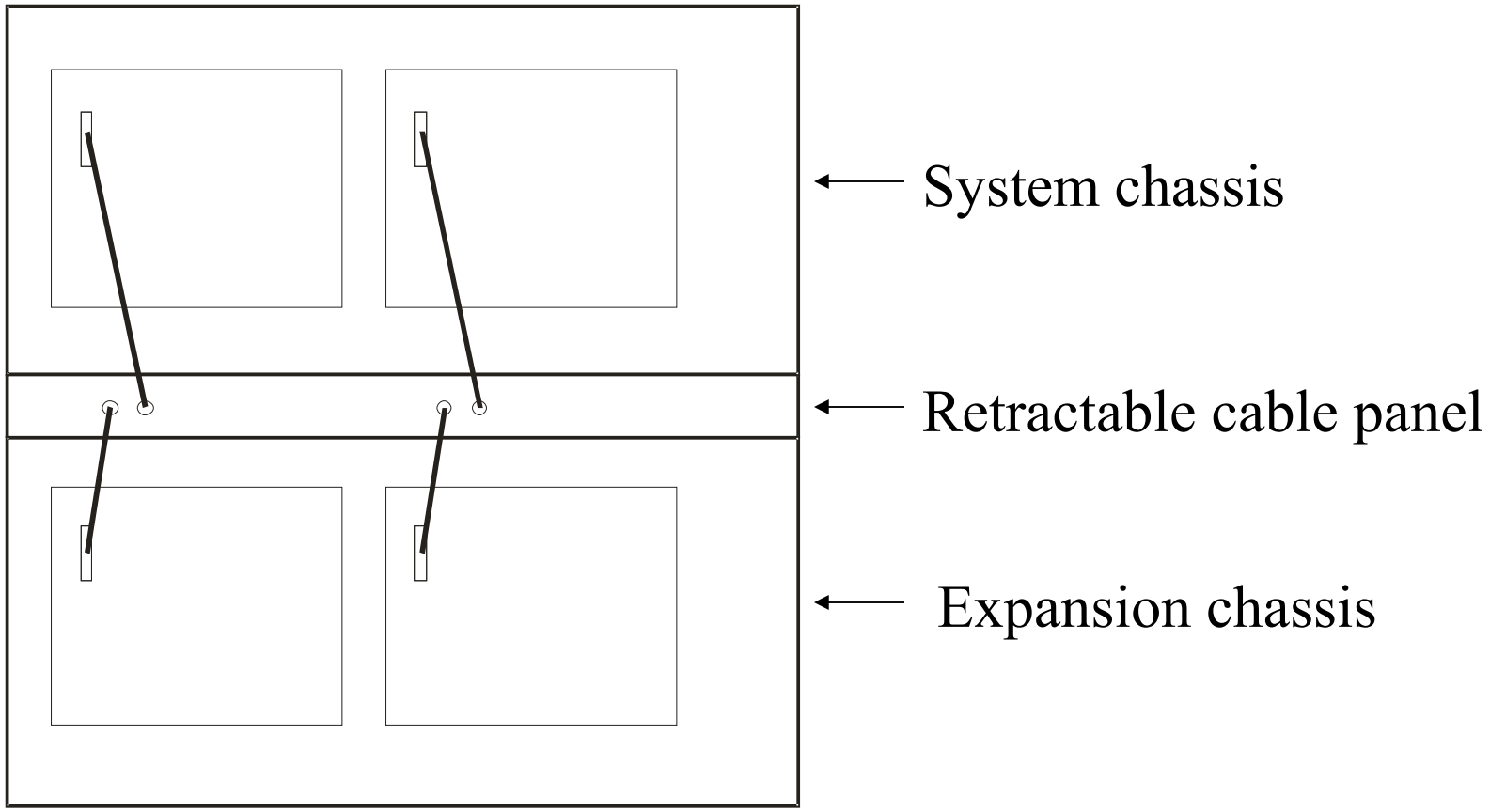

Mark 6 demo - 16 Gbps recording

(TOW mtg – May 2011)

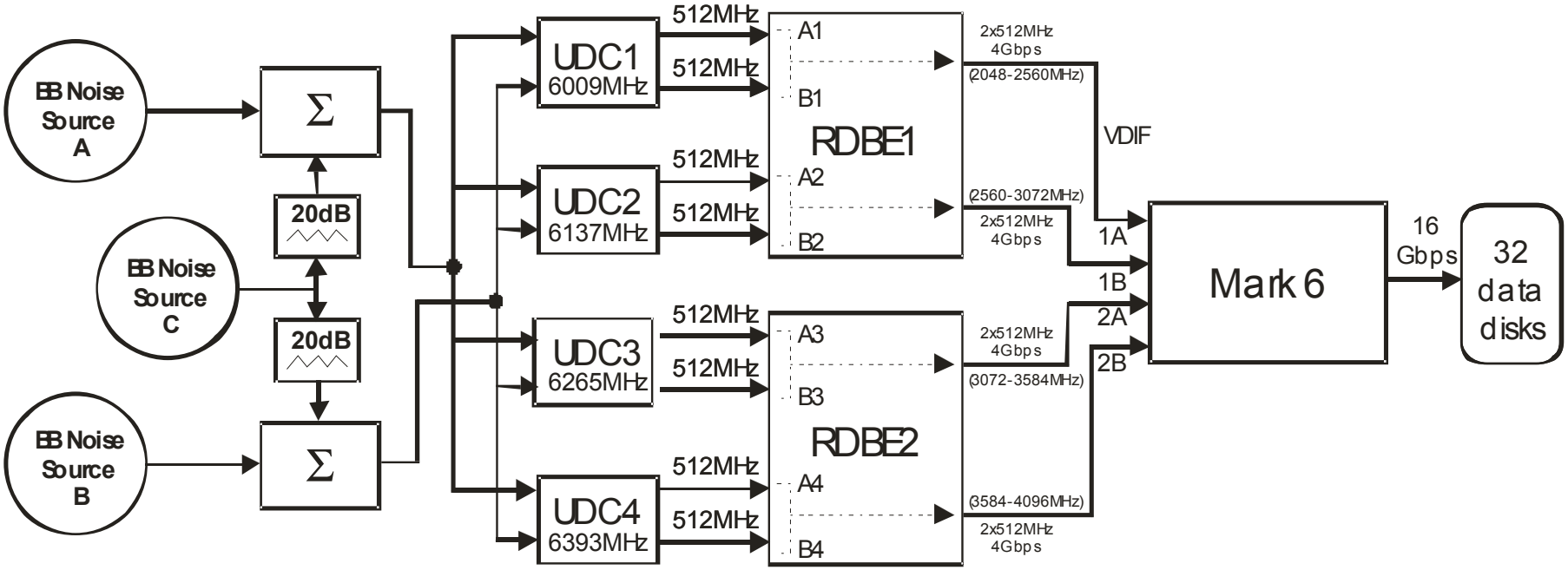

16 Gbps demonstration rack

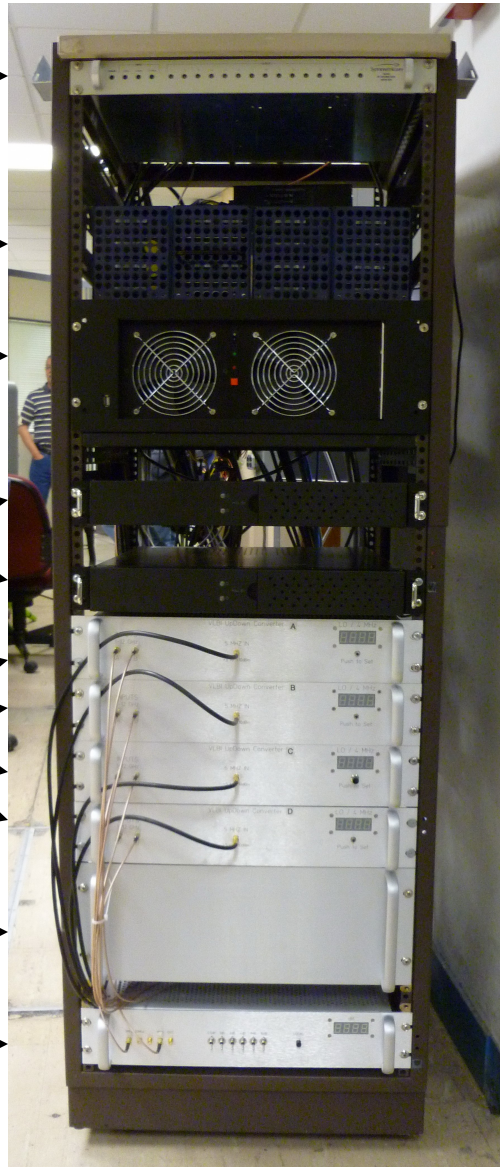

XCube unit for 16 Gbps demonstration

These connections will be fixed until cables are swapped

Can be turned 180 to double lifespan

These connections will used when switching disk packs

Visualization: Gauge – Goog | 127.0.0.1:8000/main/

127.0.0.1:8000/main/

MIT HAYSTACK OBSERVATORY

Xcube

Interface Rates(Gbps)

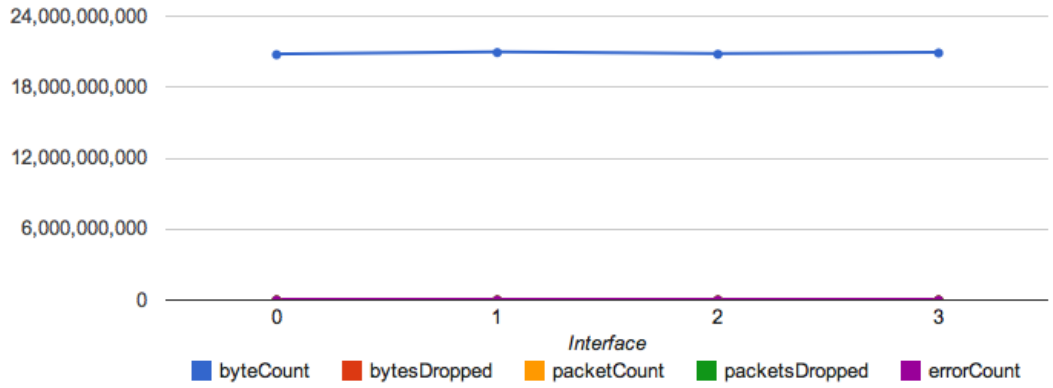

Statistics Summary

Interface	byteCount	bytesDropped	packetCount	packetsDropped	errorCount
0	20745537292	0	1232108	0	0
1	20925037342	0	1253039	0	0
2	20782349456	0	1235759	0	0
3	20889185324	0	1248820	0	0

Mark 6 demo (correlation)

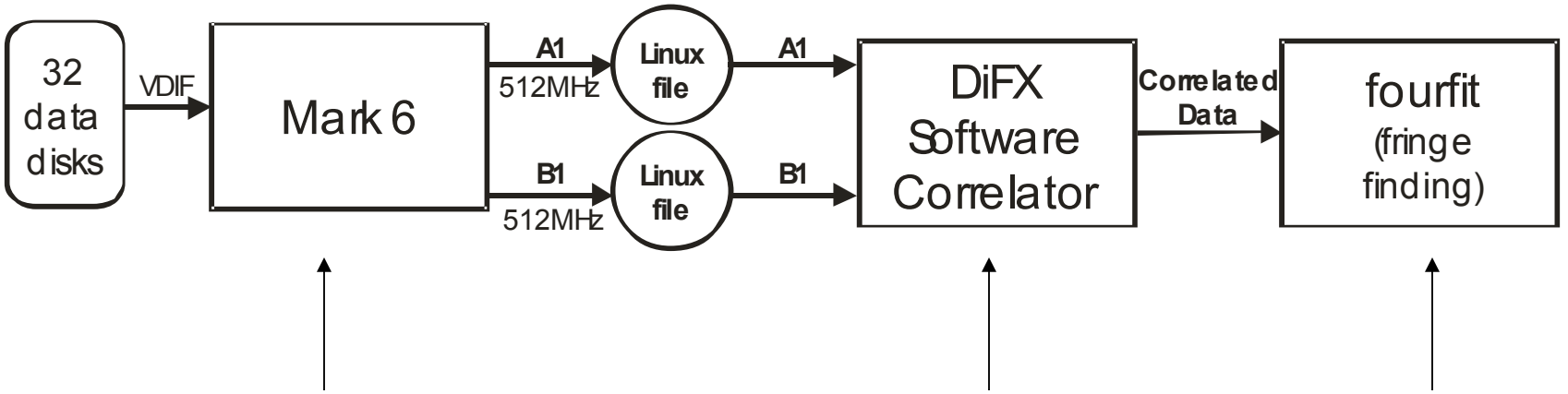

Data-stream re-assembly

Correlation

Fringe finding

Correlation

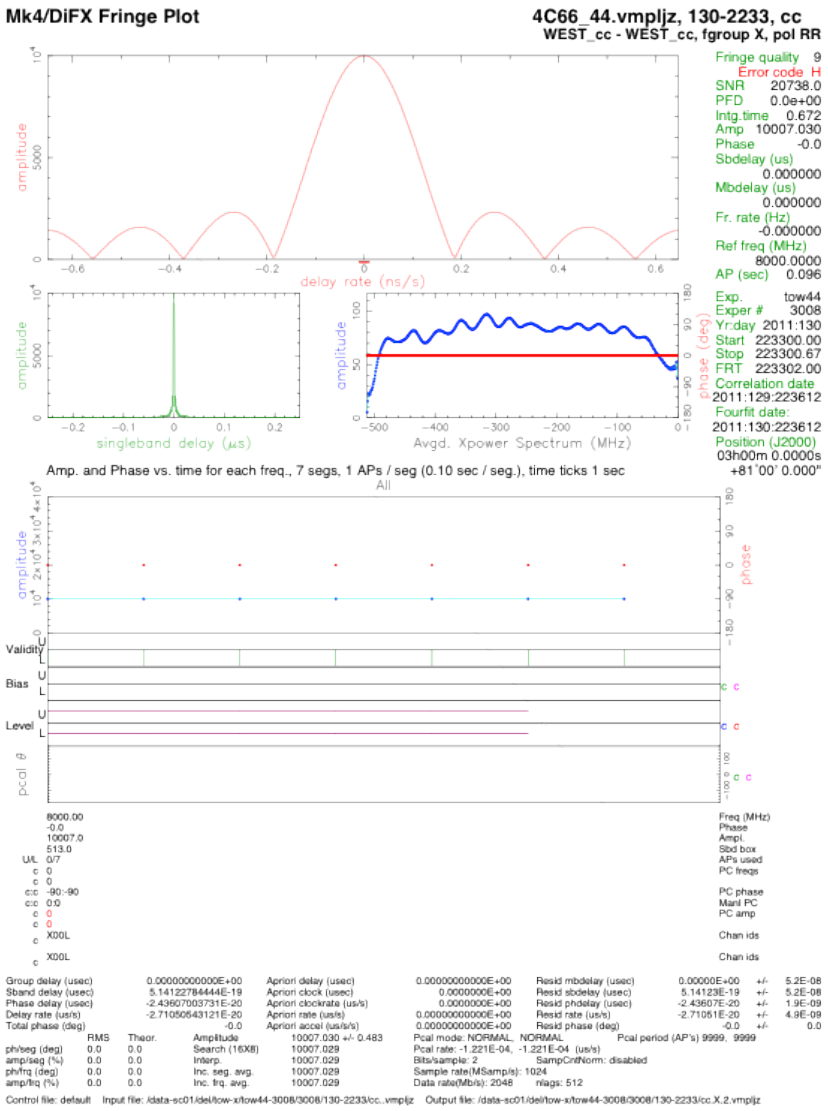

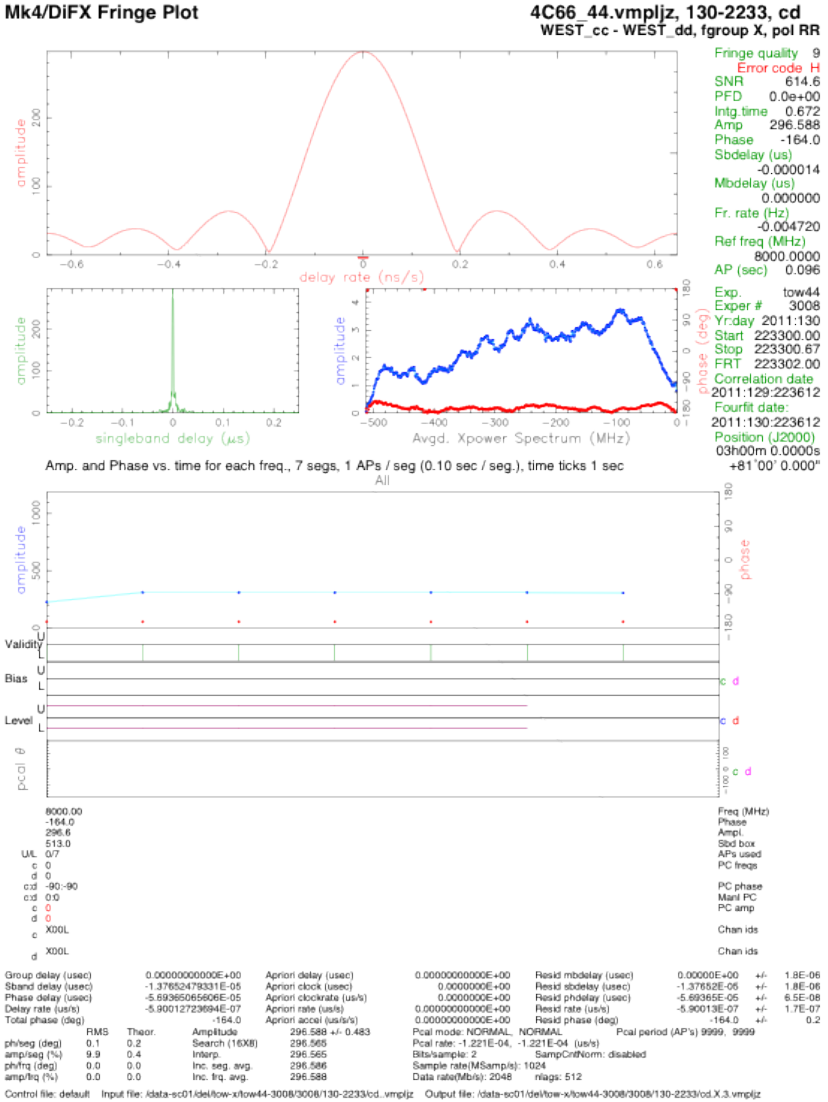

Thank You

- Chris Beaudoin, Roger Cappallo, Geoff Crew, Rich Crowley, Dave Fields, Alan Hinton, David Lapsley, Chet Ruszczyk, Ken Wilson

- John Roberts, Danni Song, Mikael Taveniku, Joe Trier, Tim Carlstrom

Questions?

Mark 6 M&C and concepts

- VSI-S M&C is built as layer on top of XML software interface
- Recording units are defined as ‘volumes’, each of which consists of
  - Multi-module volumes are required for recording rates >~4Ggps
  - Multi-module volumes retain identity thru correlation processing, then are returned to single-module volumes
- Volumes are managed on an ordered ‘Volume Stack’ that allows
  - Allows volumes to be queued in specific order for usage
  - Supports automated switchover to next volume in Volume Stack when current module becomes full; switchover takes place between scans
- Disk statistics gathered during recording allow easy identification of
- Modules are self-discovered when connected to Mark 6